The Prototype Tracking and Imaging Gamma-Ray Experiment (TIGRE) for Balloon Flight Observations

A. D. Zych, D. Bhattacharya, T. O'Neill,
V. Kong, M. Polsen, C. Herman, L. Haley

Institute of Geophysics and Planetary Physics, University of California, Riverside

COMPTEL ^{26}AL 1.8 MeV Emission

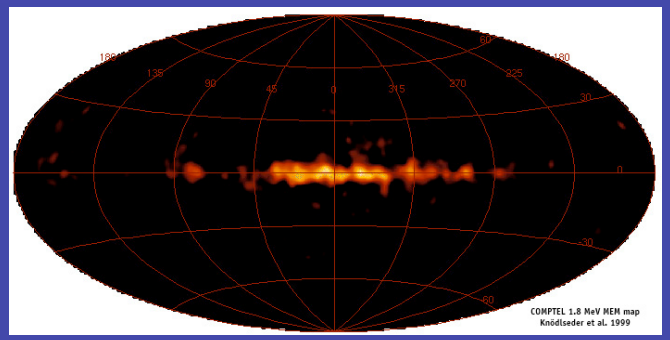

- **Science Objectives**
  - **Galactic Annihilation Line Emission**
  - **Galactic ^{26}Al Emission**
  - **Pulsar Polarized Gamma-rays**
- **Background Verification w/ Prototype Flight**
- **Conventional and Long Duration Flights**

Crab Nebula and Pulsar

1972-Double-Scatter Neutron Telescope

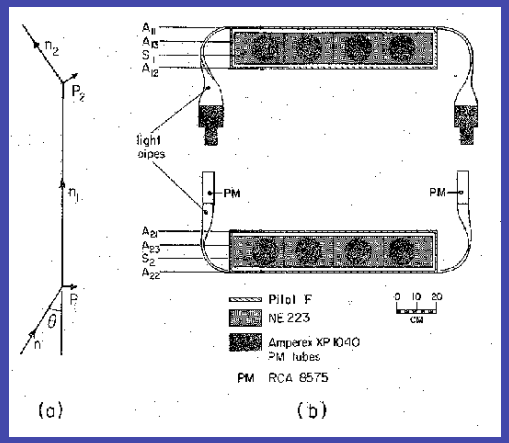

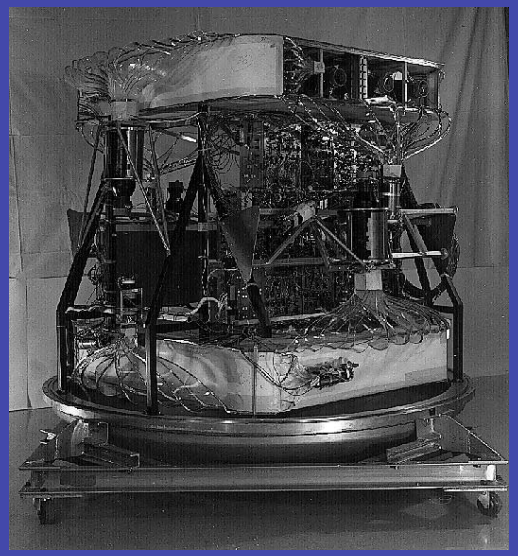

1975-Compton Gamma-Ray Telescope

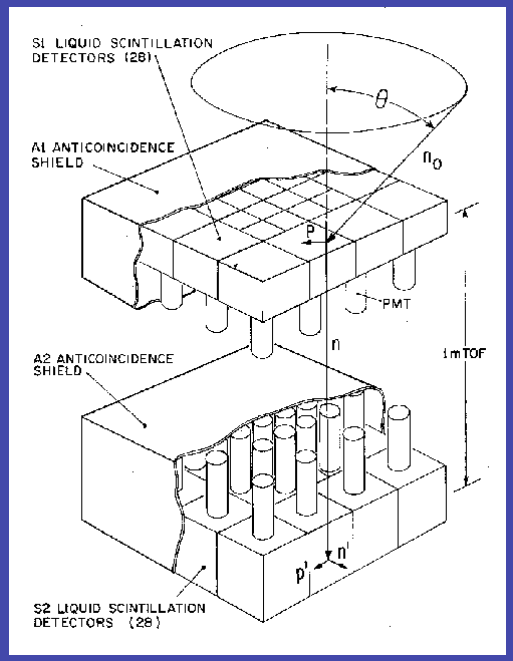

TOF Spectrum

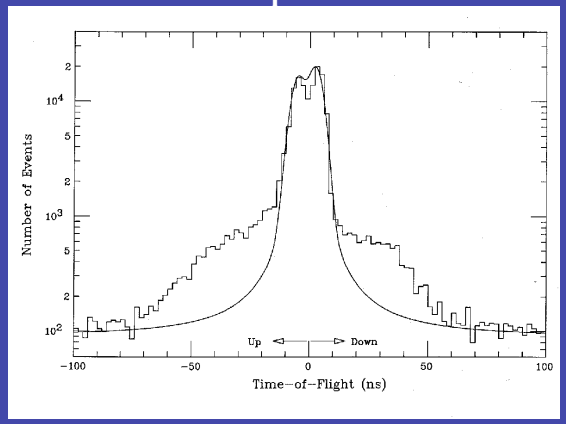

2.2 MeV Background Line

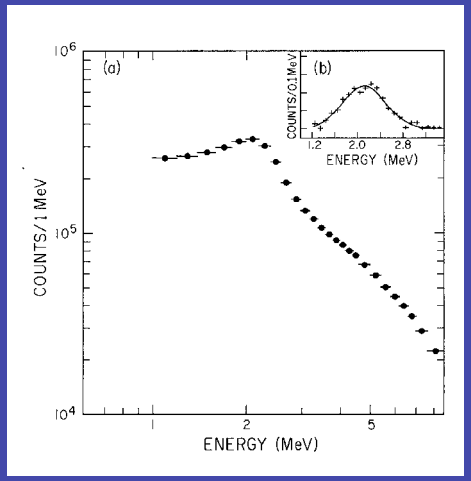

Crab Image

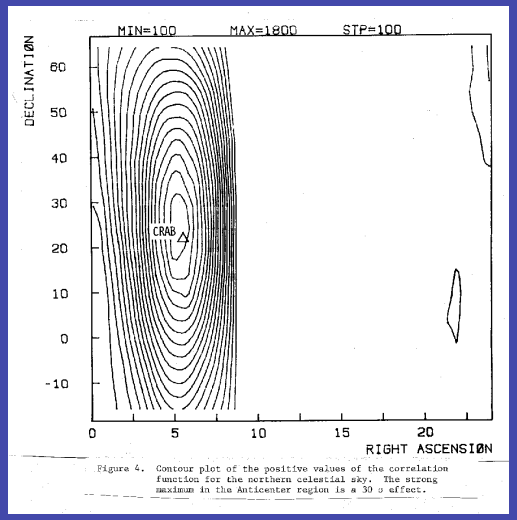

1988 Observation of SN-1987a

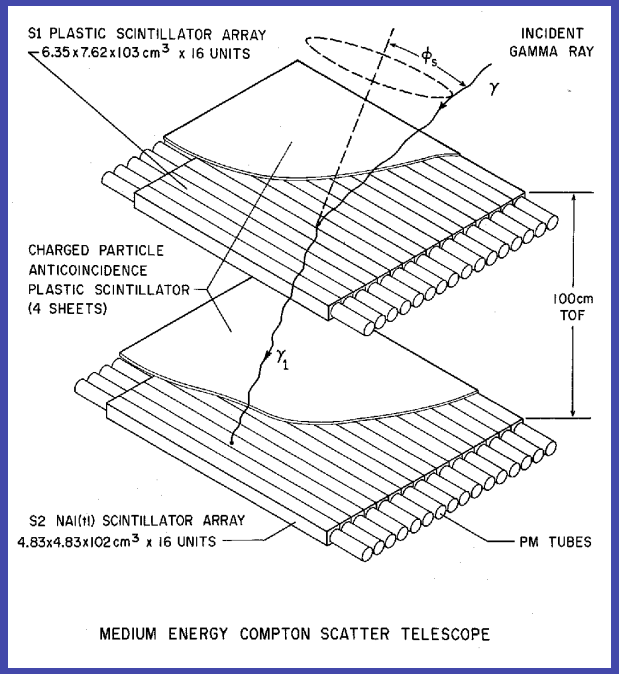

Co-56 Line Emission

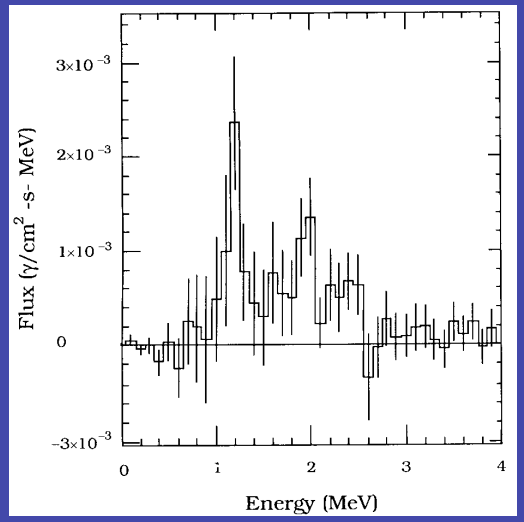

Compton Telescope with Recoil Electron Tracking and Electron Direction-of-Motion (DOM)

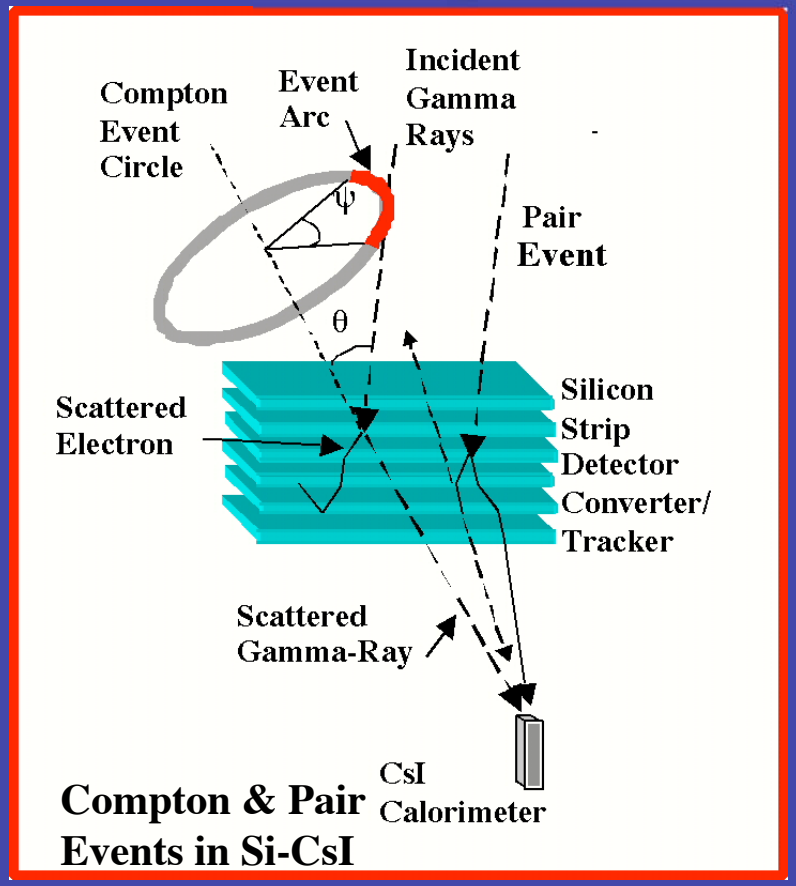

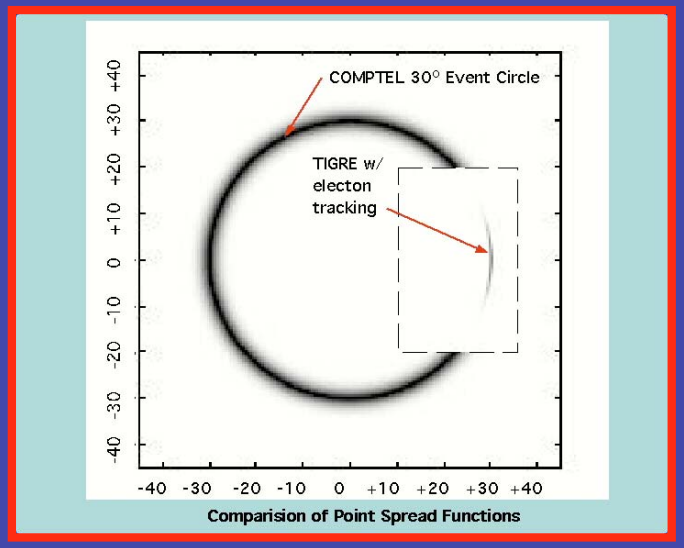

Reduction of PSF from "event circle" to an "event arc" eliminates background events that can contribute to source counts

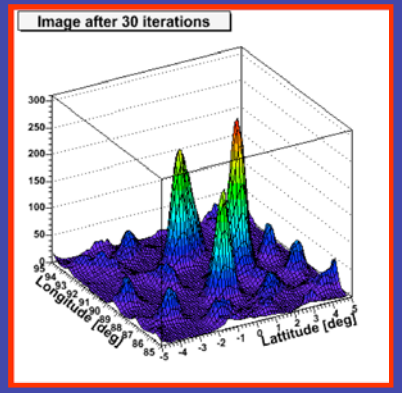

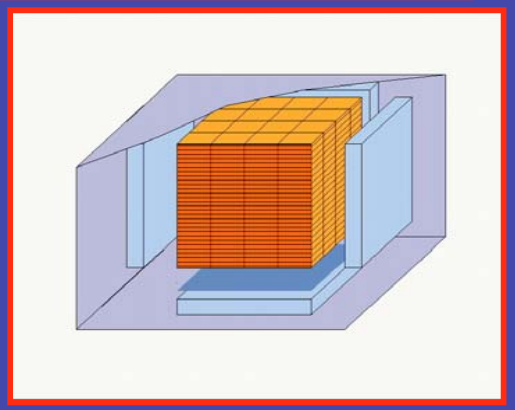

Balloon Prototype

- **2005 Flight**
- **$\delta Q = 2^{O}$ dE = 33 keV**
- **A_{eff} ~20 cm^2**

1600 cm^2 x 32 Si Layer Instrument by 2008

Direction-of-Motion of Recoil Electron

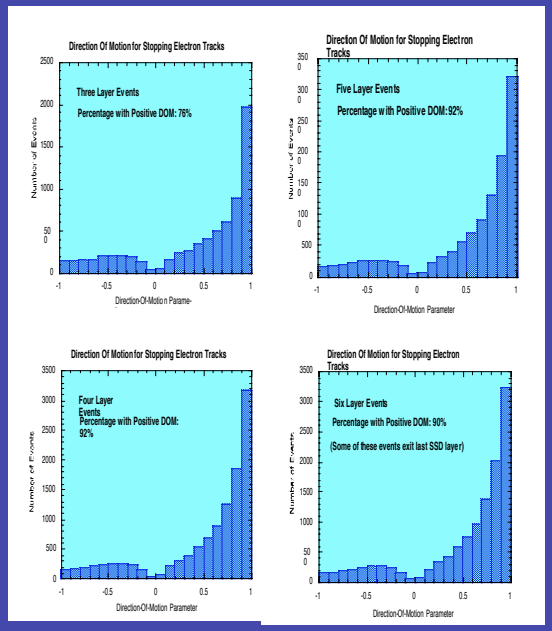

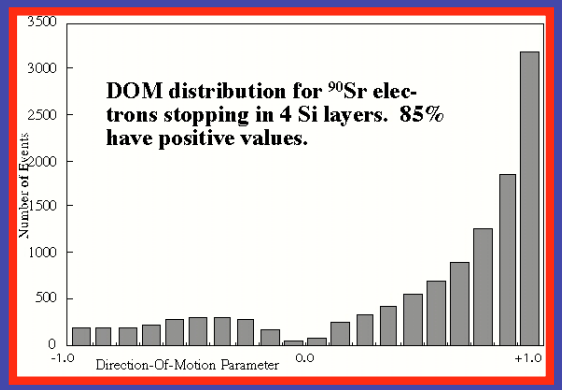

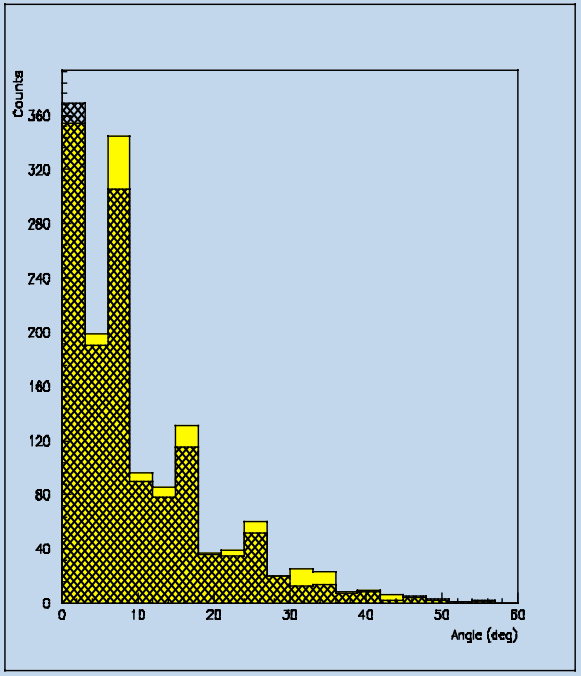

Laboratory tests with electrons traversing multiple layers of silicon strip detectors have been compared with computer simulations. The purpose is to validate our understanding of the electron tracking and the effect of the readout discreteness of the strip detectors. A least square method was used to obtain the most probable location of the electron intersection within each strip. This figure shows the measured projected scatter angle for ~2 MeV electrons averaged over 6 layers. The cross-hatched histogram shows the simulation. The average angle is ~15°.

9% of all events tracked at 511 keV

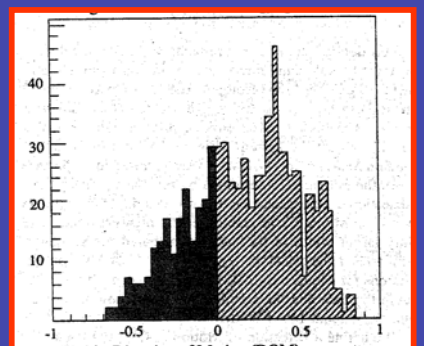

Fig. 9 Direction of Motion (DOM) parameter fot 511 keV photons from Na^{22}.

20% of all events tracked at 900 keV

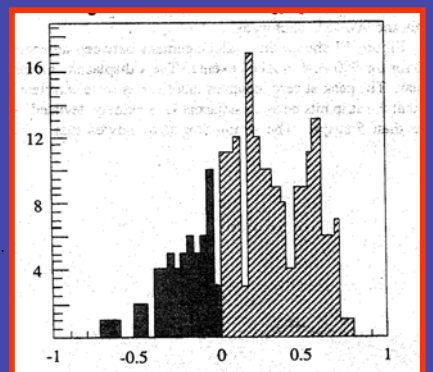

Fig. 15 Direction of Motion (DOM) parameter for 900 keV photons from Yt^{88}.

Compton Scatter Performance

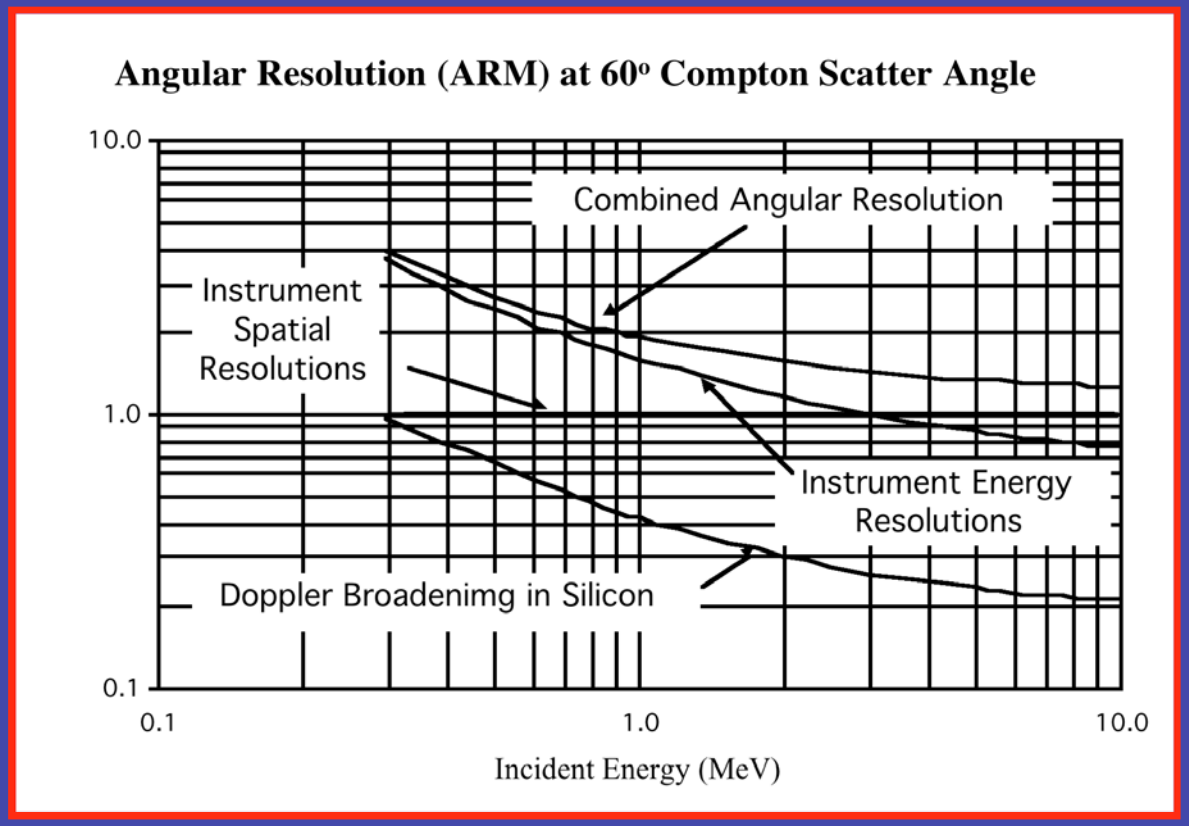

- **The angular resolution at 1 MeV is 2° (1s).**
- **It is dominated by the CsI calorimeter energy resolution.**
- **The total measured energy is unaffected by the Doppler broadening.**
- **Doppler broadening in the silicon converter/tracker contributes 0.4°.**

- ***If the calorimeter resolutions can be reduced to 2 keV and 1 mm (e.g., w/ Ge or CZT), then the instrument angular resolution is limited only by the Doppler Broadening limit.***

Pair Event Performance

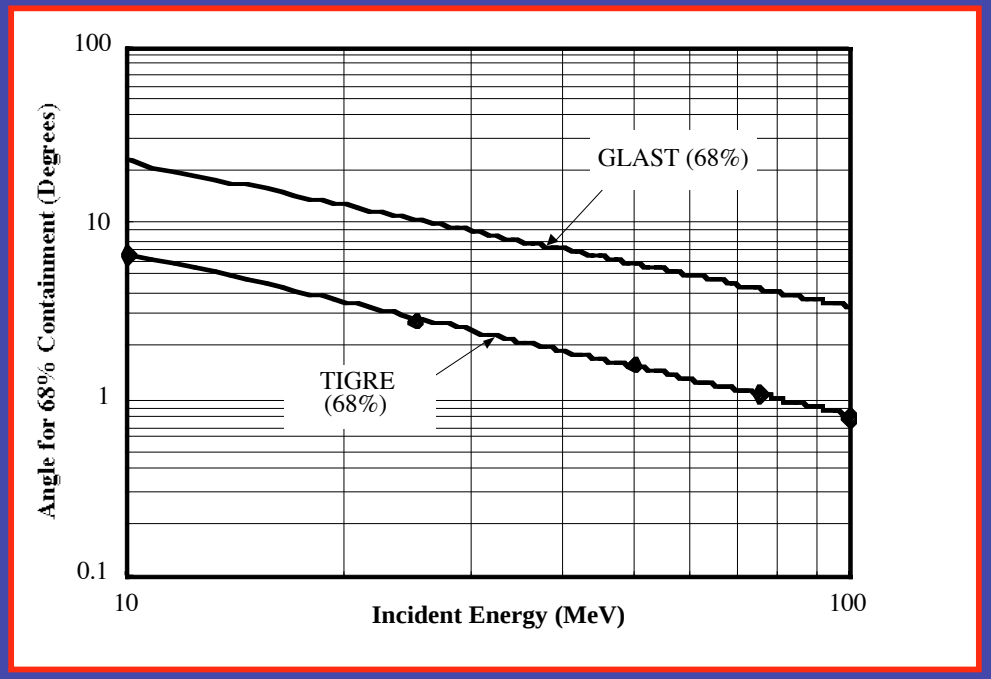

Comparison of GLAST and TIGRE angular resolutions.

TIGRE has 6º and 0.8º (68%) resolutions at 10 and 100 MeV.

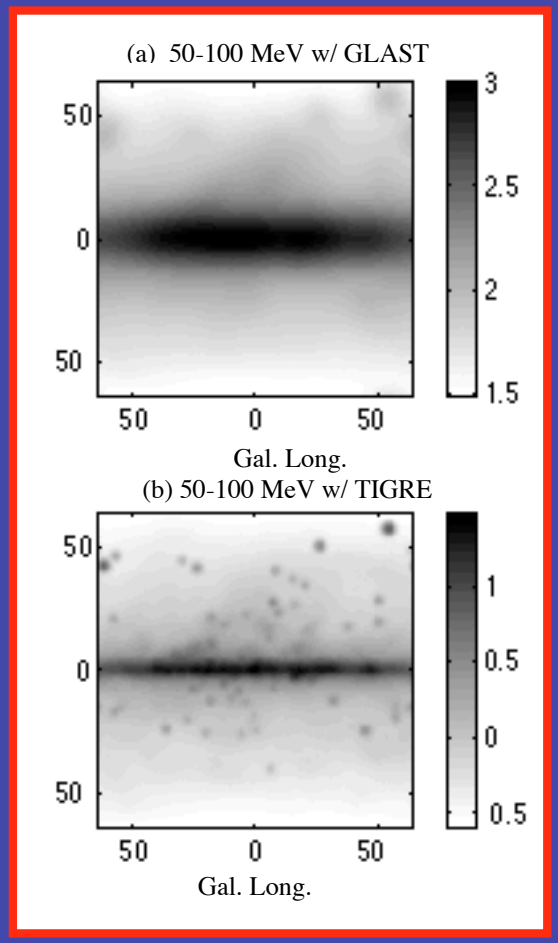

EGRET galactic diffuse emission and EGRET discrete sources in Galactic Center region at 50-100 MeV, deconvolved with GLAST and TIGRE PSFs.

TIGRE Mass Model

BASELINE MASS MODEL

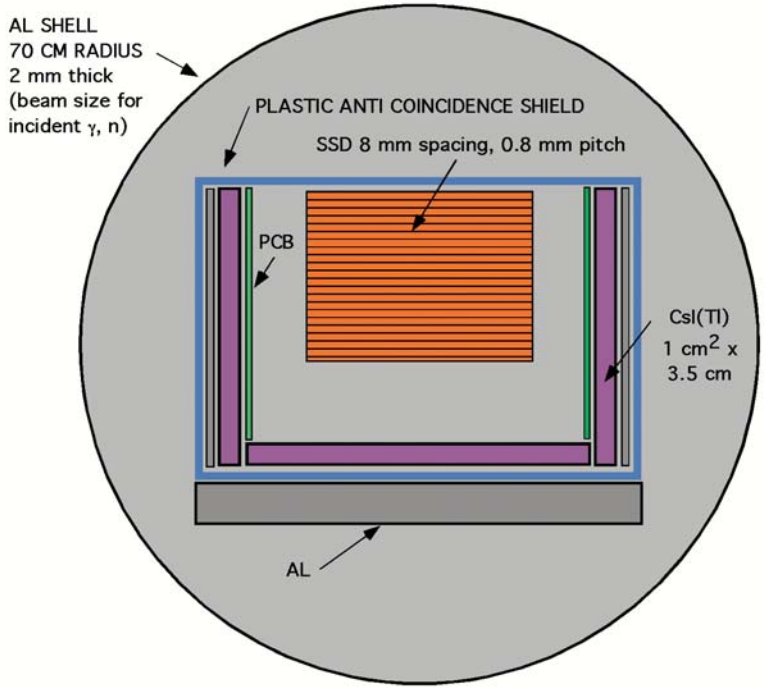

Mass Model

Si:	32 layers x 300 μ (40 cm x 40 cm)	3.7 kg
CsI:	Bottom 57 kg, Sides 192 kg	249 kg
Anti:	1.5 cm thick Scintillator Plastic	25 kg
PCB:	1 cm thick, Bottom 3 kg, Sides 18 kg	21 kg
AL:	Bottom 103 kg, Sides 24 kg, Shell 34 kg	161 kg
	Total	460 kg

Atmospheric Gamma and Neutron Backgrounds

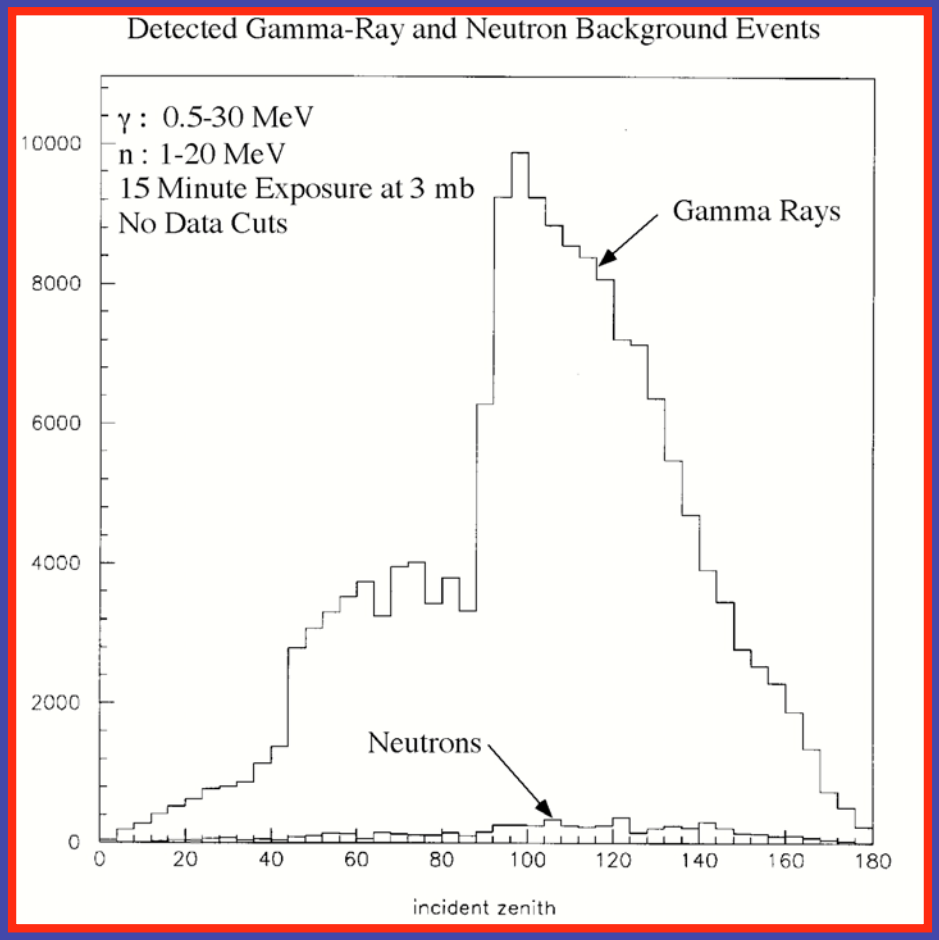

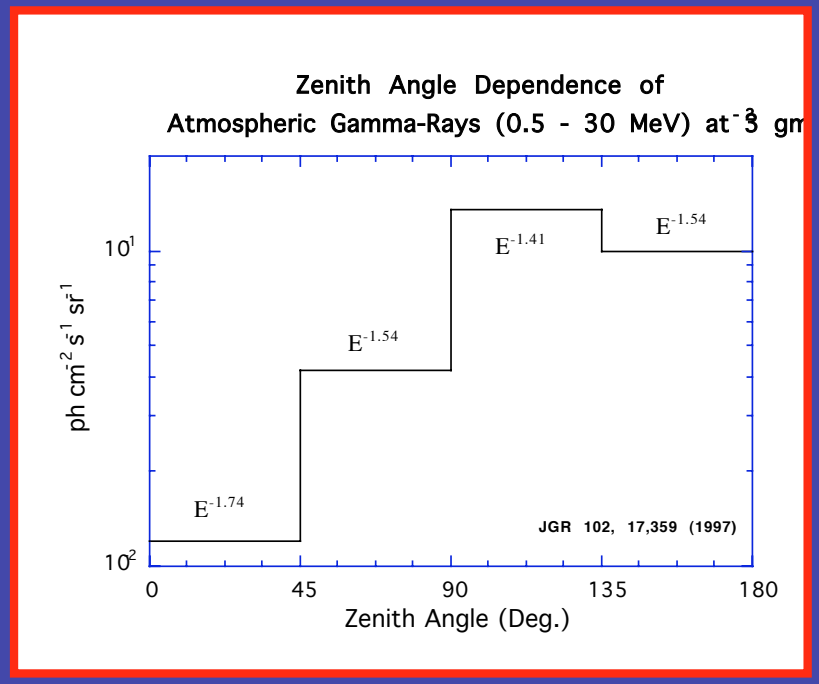

Simulation with Full Mass Model

- 7-hour exposure at 3 mb
- 1×10^6 Crab source gammas (E^{-2} >1 MeV)
- 20×10^6 background gammas (scaled down from 3.24×10^8)

- 2×10^3 source and 9.3×10^3 (scales to 1.5×10^5) background events detected
- Cuts reduce background by 90%

- Maximum likelihood sensitivity analysis with 1-D PSF
- Crab detected at 9.6 s (scaled to true background)
- 7×10^{-4} ph cm^{-2} s^{-1} (3s) integral sensitivity > 1 MeV in 7-hours exposure
- Crab source location accuracy in 7 hours: 4° error circle (68%)

- Further improvement possible with 2-D PSF

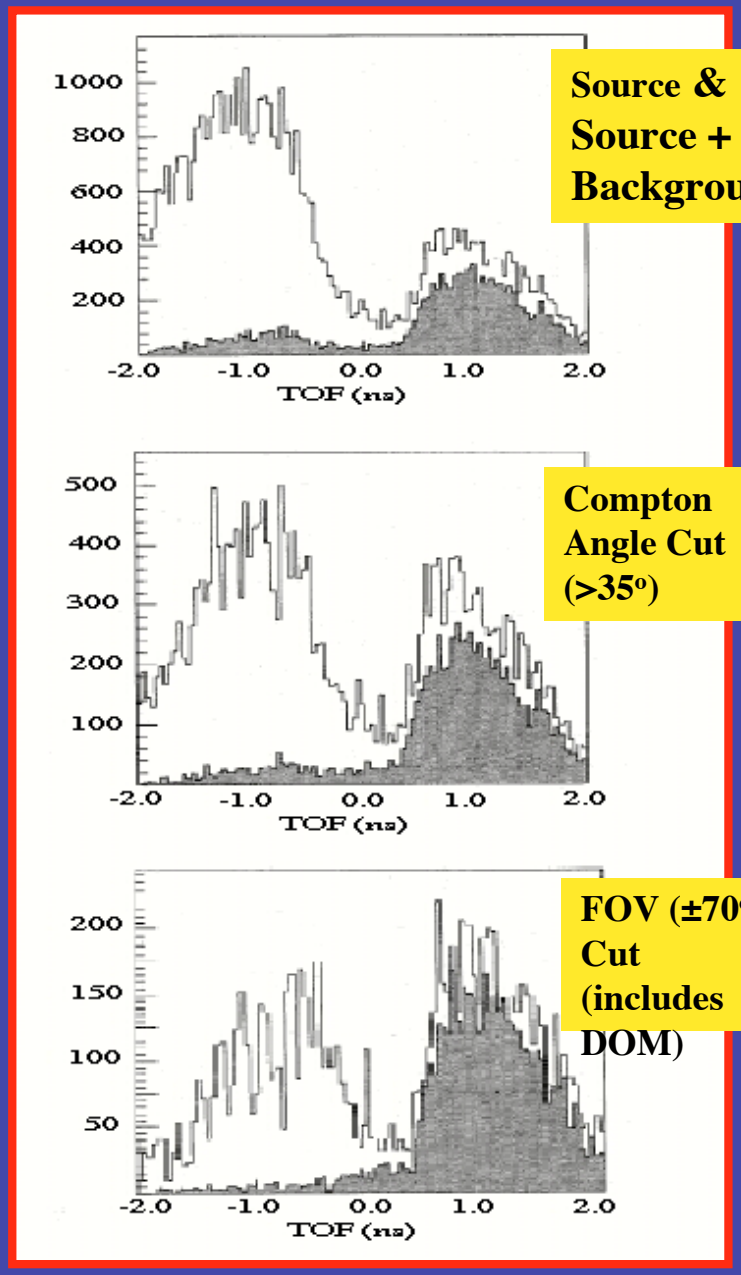

MICRON Semiconductor 10 cm x 10 cm x 300 mm Silicon Detector w/ IDE AS TAA1 Chip

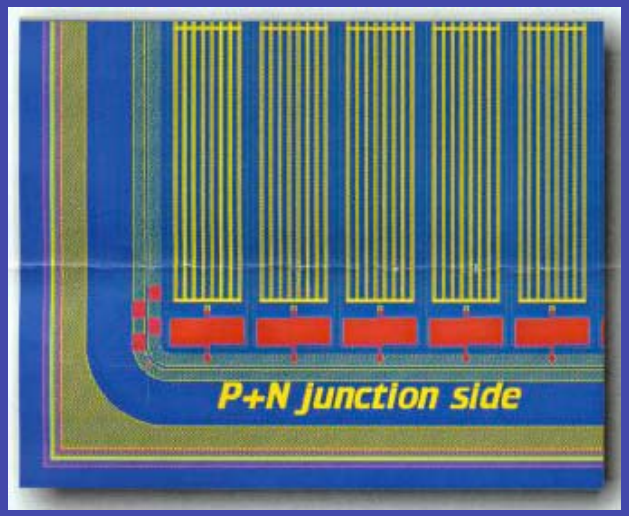

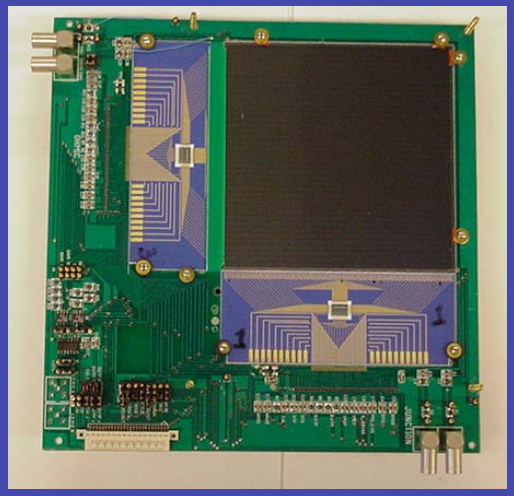

A.C. Coupled: 1000 pF
Polysilicon Bias Resistors: 50 Mohm
Pitch: 758 mm, 128 strips per side
Active Area: 9.73 cm^2
Full Depletion (FD): 50V max.

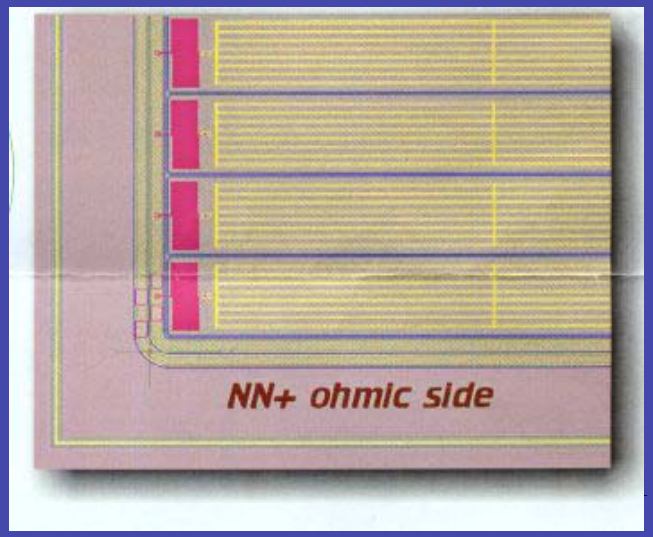

TIGRE Detector Components

Mosaic of 4 Silicon Detectors

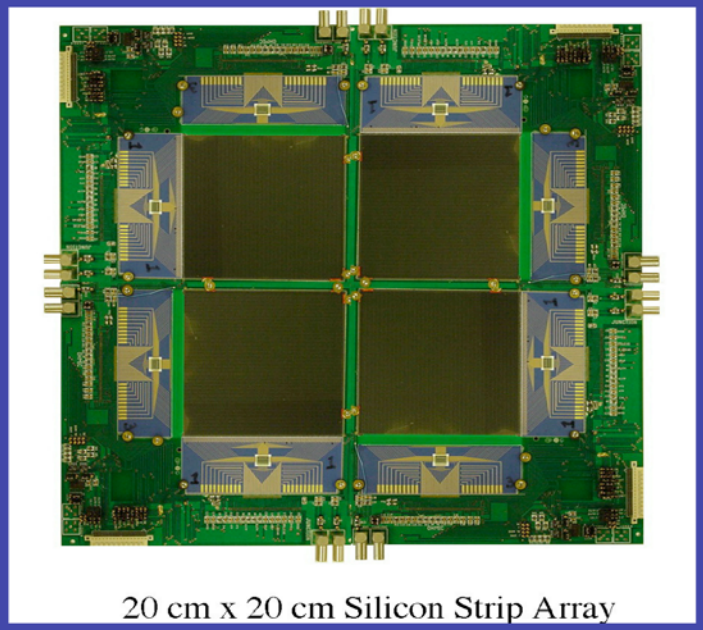

Stack of 16 Layers

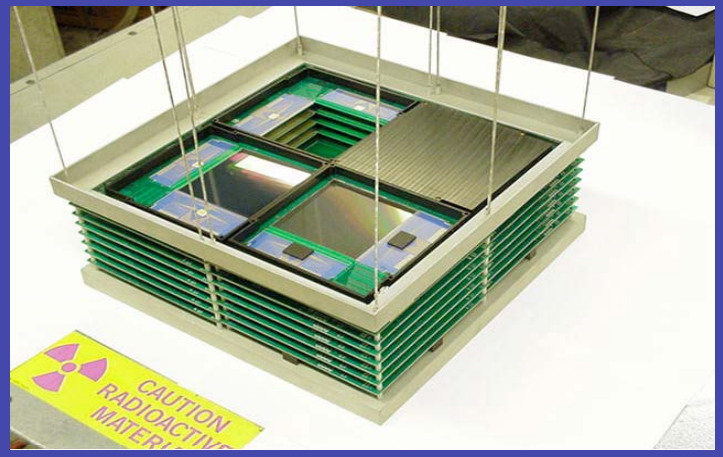

CsI(Tl)-Photodiode Array

Carrier with TAA1 Chip

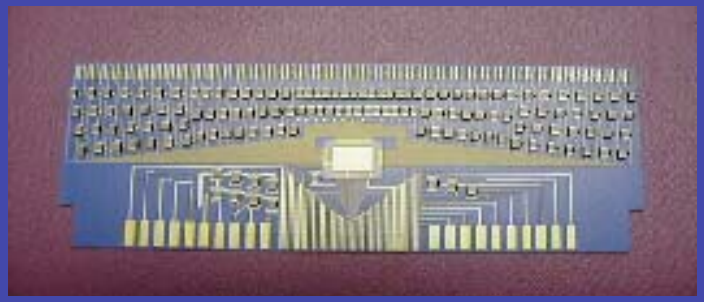

Preliminary Si Noise Measurements

Noise Level (e) for 256 Channels w/o Si Detector

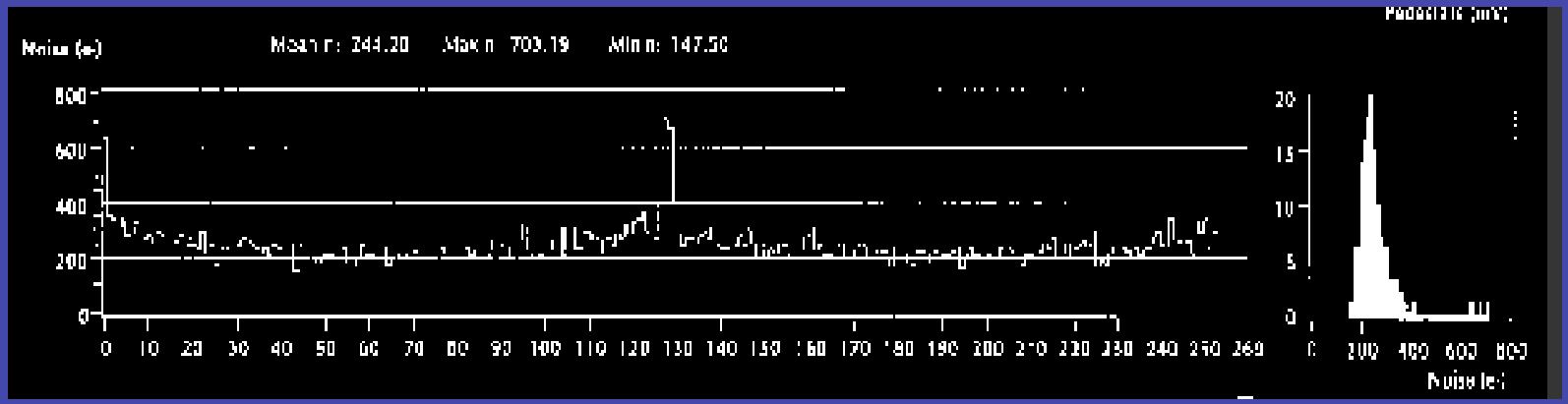

Noise Level (e) for 256 Channels w Si Detector

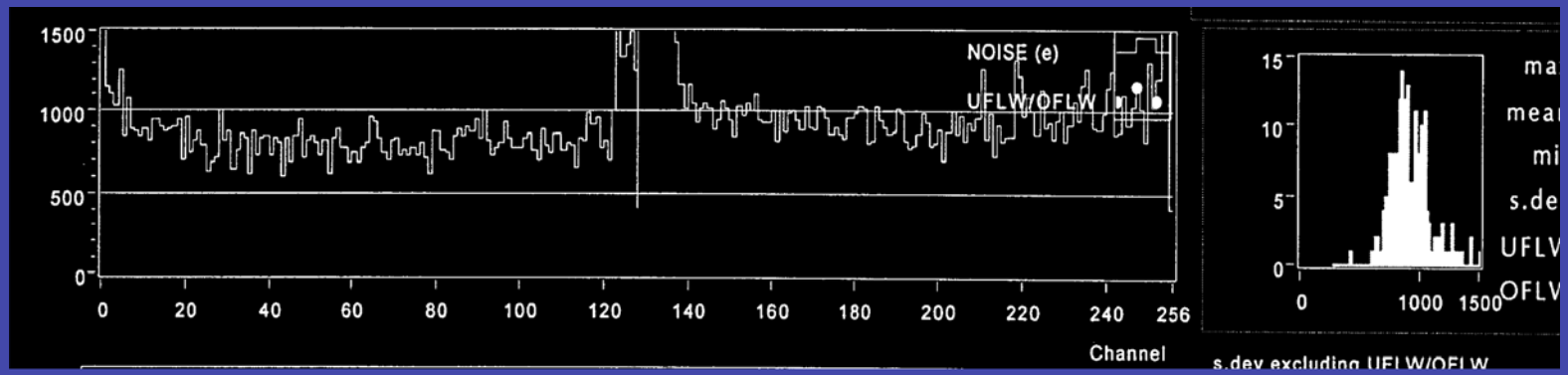

TIGRE Si Detector Test Results

Silicon Detector Electron Energy Loss vs Channel Number

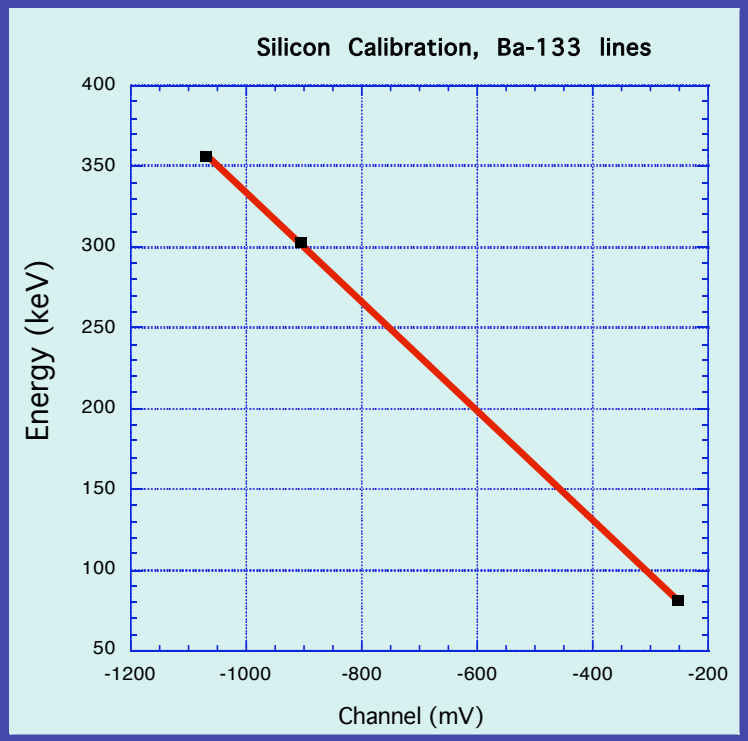

Measured Energy Resolution 4.6 keV 1-s @122 keV

Silicon Detector Electron Energy Loss vs Channel Number w/ Ba-133

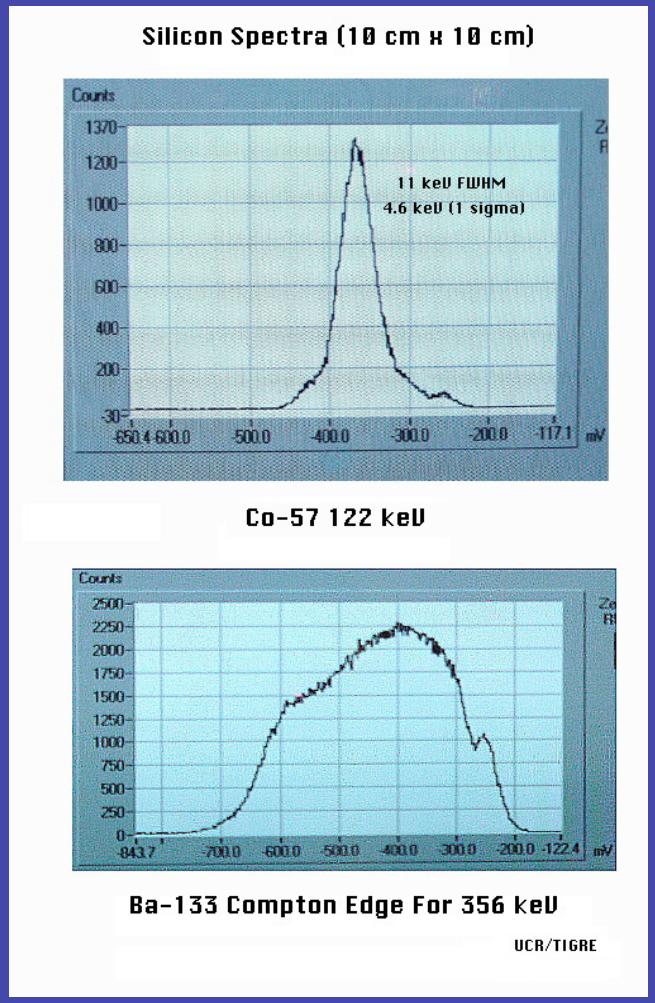

Block Diagram of Electronics

- 64 Silicon Detectors
- 256 channels per detector
- Each detector serially readout to single A/D channel
- 5 Arrays with 256 CsI-Pd detectors per array
- NIM and CAMAC to support NaI array & charged particle shield

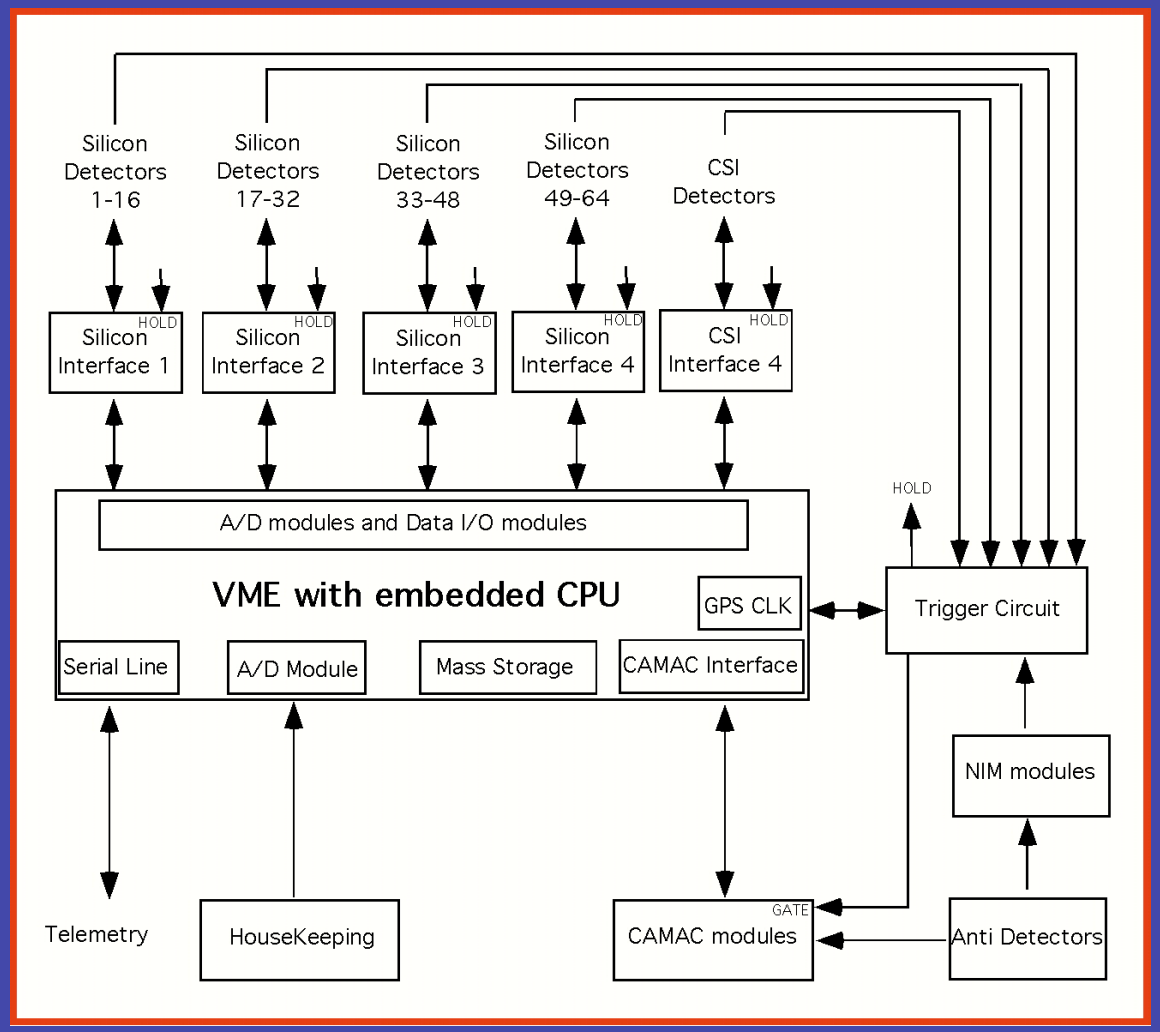

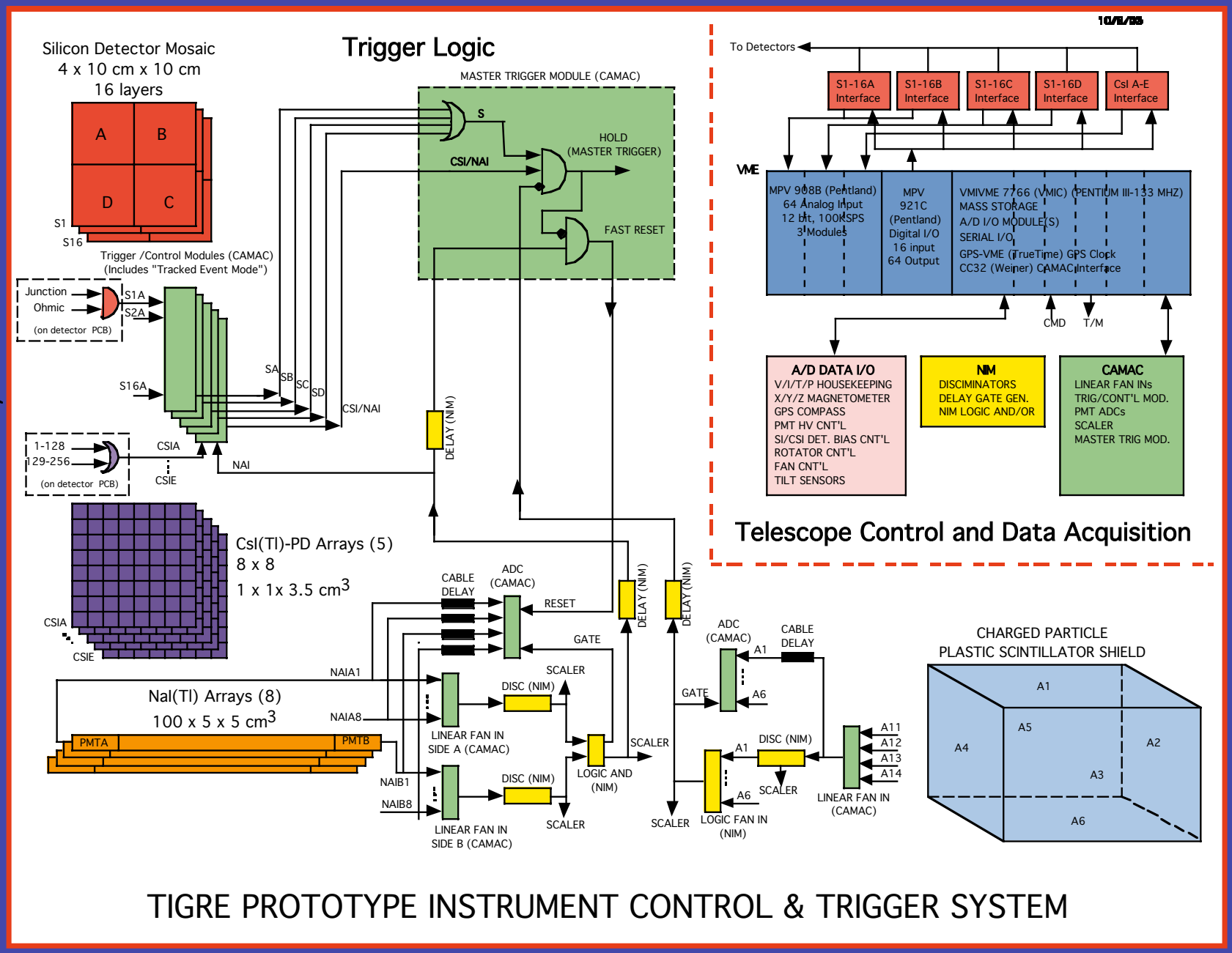

TIGRE PROTOTYPE INSTRUMENT CONTROL & TRIGGER SYSTEM

Prototype Balloon Payload

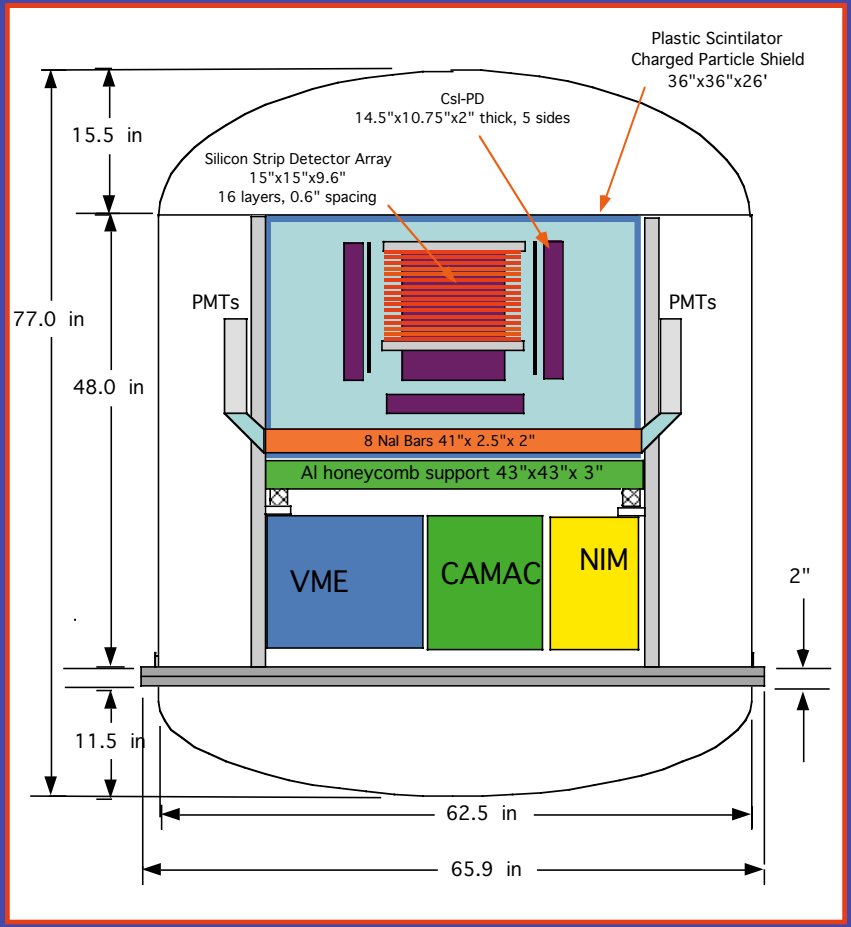

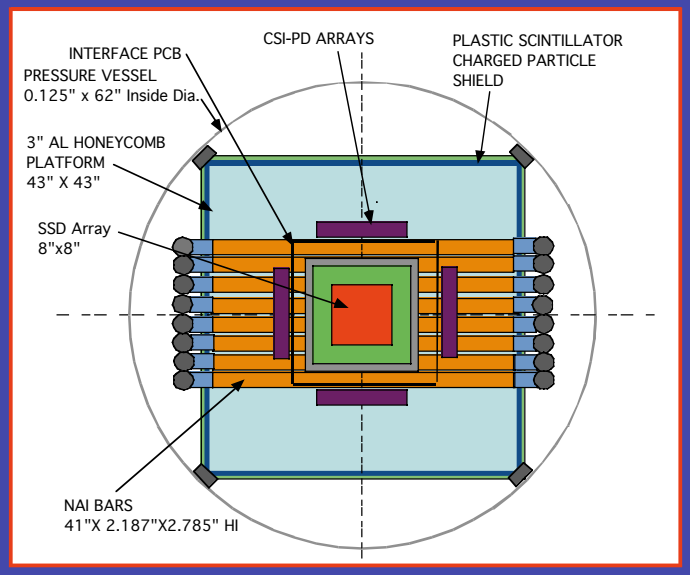

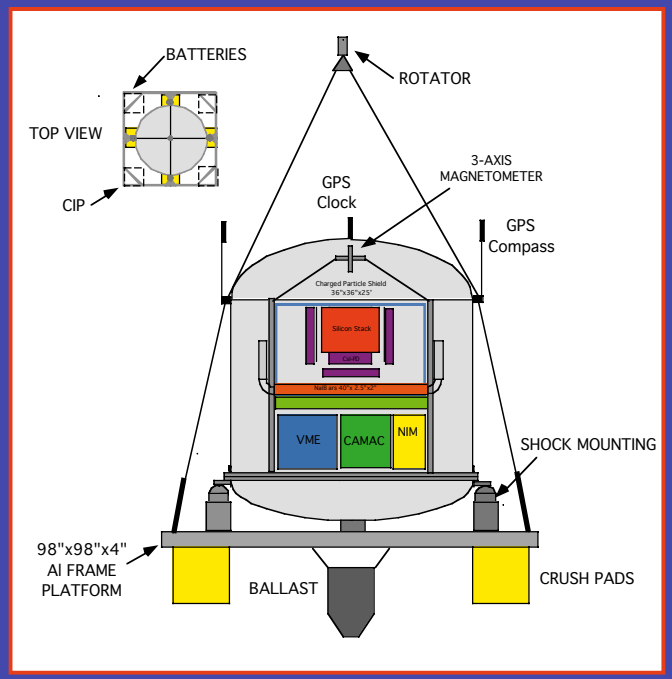

Telescope Components

NaI Bars

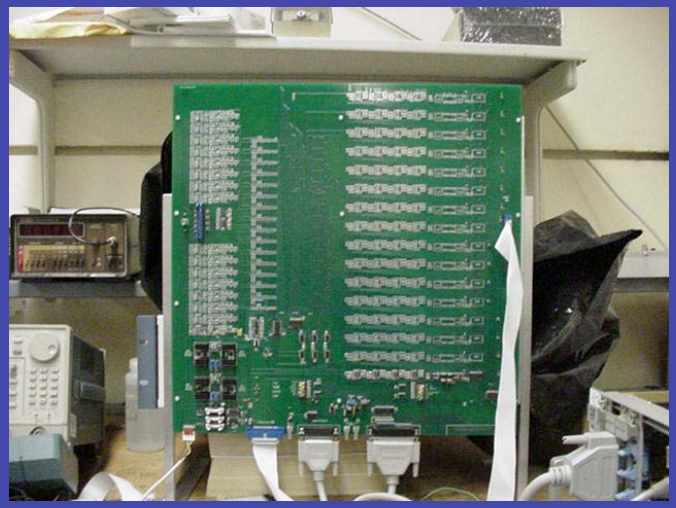

Silicon Detector Interface

PMTs for Anti & NaI

Wire Bonding

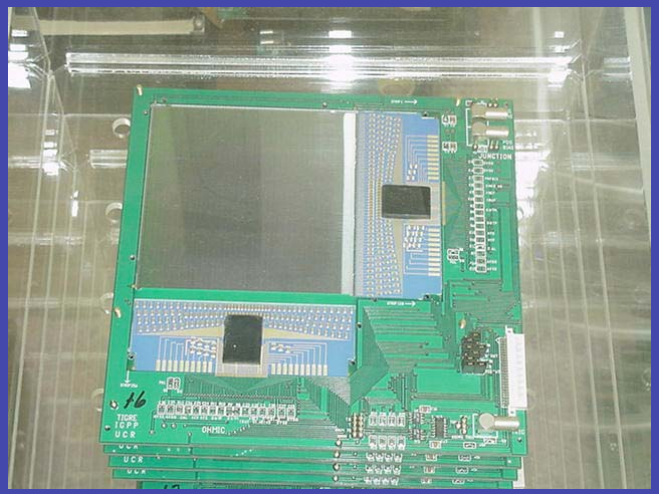

Completed Detectors

Pressure Vessel

2:1 Elliptical Wood Form

Spinning the 2.4-mm Al dome

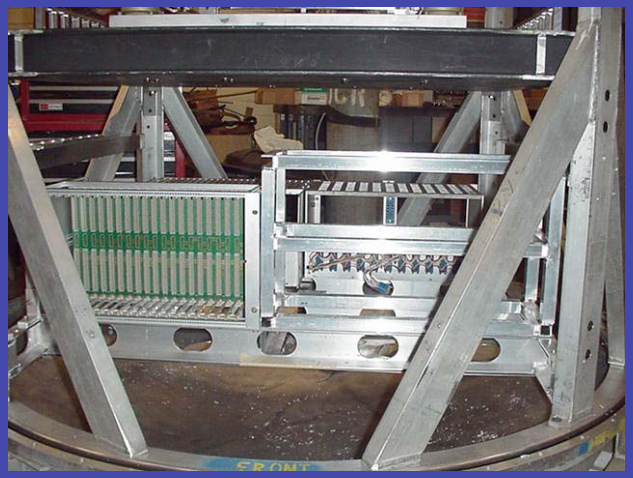

Pressure Vessel Cylinder & Flange

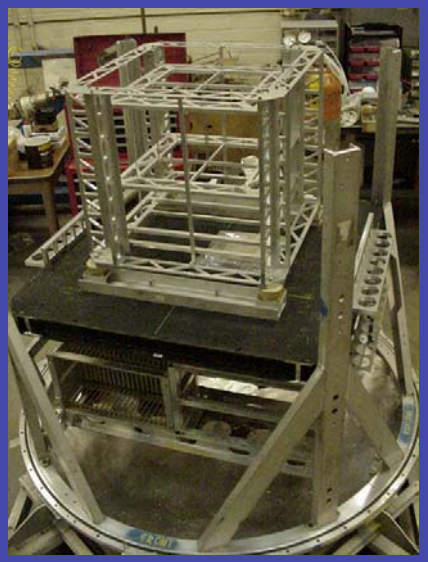

Detector Support Structure

Future Balloon Flight Program

- **2005: Continental US flight for background verification and initial polarized observations of the Crab pulsar.**
- **2006: Instrument upgrade-increase silicon layers to 32**
- **2006: Southern hemisphere mid latitude conventional flight.**
- **Upgrade instrument (4 towers): Long Duration (10 days) Balloon Flight as part of a SMEX/MIDEX Opportunity**

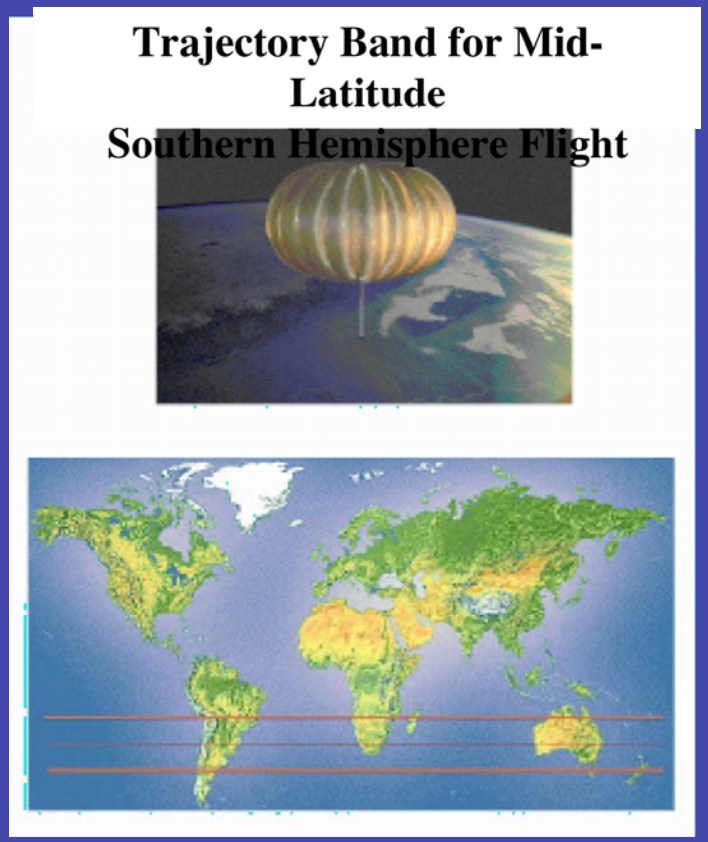

Exposure in Galactic Coordinates

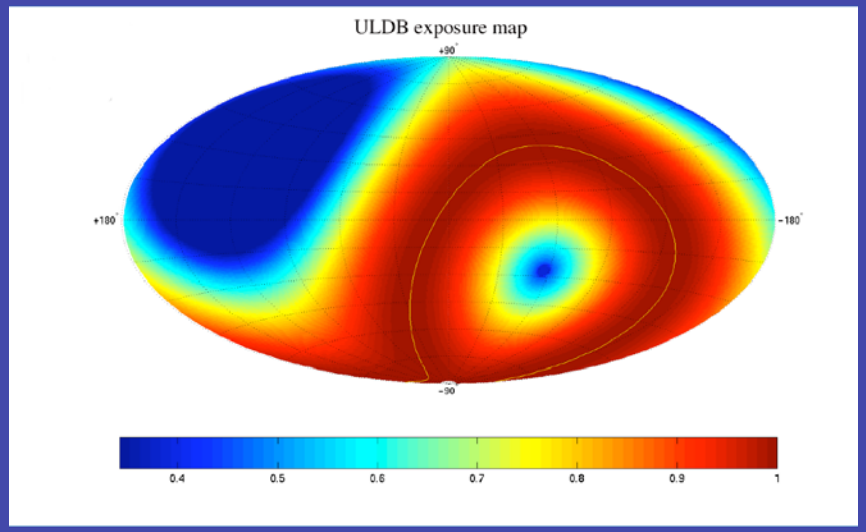

Maximum exposure to galactic center with zero exposure at geographic poles

TIGRE Concept

Silicon Converter/Tracker

- **Thin Detectors w/ Electron Tracking**
- **Direction-of-Motion Parameter**
- **Unique Event Reconstruction**
- **Improved PSF & Background Rejection**
- **Single Converter Interaction**
- **Minimum Doppler Broadening**
- **Excellent Energy & Spatial Resolutions**

High-Z High Density Calorimeter

- **High Compton Photon Absorption**
- **Excellent Energy & Spatial Resolutions**

TIGRE ACT VISION CONCEPT

- **Area = 14.4x10^3 cm^2**
- **Efficiency = ~5% @1 MeV**
- **Effective Area = 720 cm^2**
- **$D\theta$ = 0.4^o (1 s) @ 1 MeV**
- **DE = 5 keV (1 s) @ 1 MeV**
- **FOV = ± 70°**
- **300 keV-100 MeV**
- **Electron tracking to 500 keV**
- **Direction-of-Motion**
- **Unique event incident direction**
- **Pair events to 100 MeV**
- **Polarization to 2 MeV**
- **Minimum Doppler Broadening**
- **Sensitive mass: 820 kg**
- **Charged particle shield**

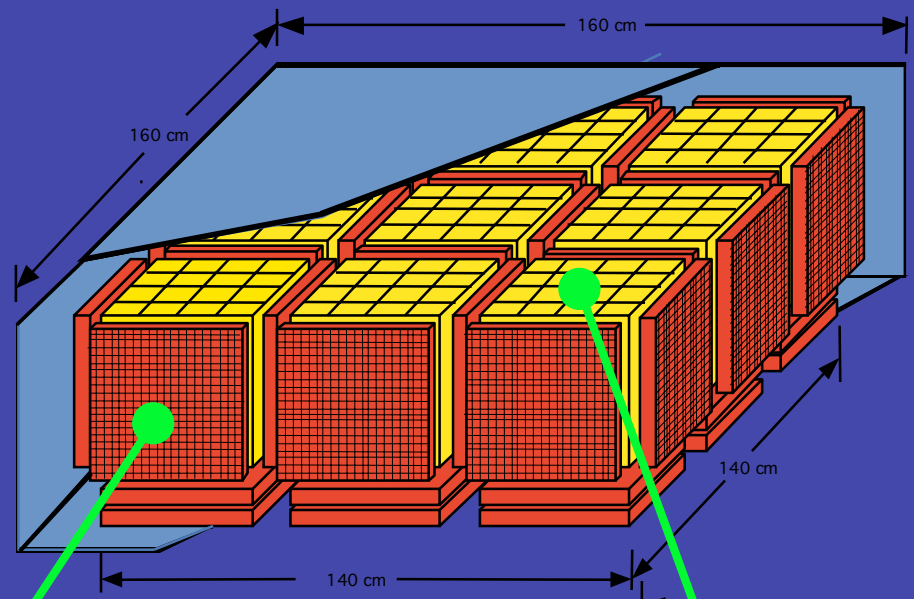

Position-Sensitive Calorimeter Module

- 42 modules required
- CdZnTe detector elements
- Z_{avg} = 49.1, r = 5.79 g/cm^3
- 2 cm x 2 cm x 2 cm thick
- 11.6 g/cm^2 of CZT
- 1 mm position res. (3D)
- 400 elements per module
- Module area: 1600 cm^2
- 18.5 kg of CZT

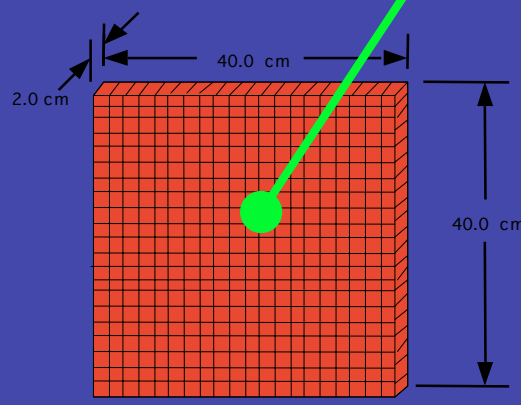

CdZnTe Calorimeter

Converter/Tracker Module

- Nine (9) modules required
- Silicon Strip Detectors
- Z = 14, r = 2.3 g/cm^3
- Double-sided
- 10 cm x 10 cm x 150mm thk
- 0.78 mm strip pitch
- 128 strips/side
- 16 detectors per layer
- 80 layers
- 0.5 cm layer spacing
- 2.8 g/cm^2 of Si
- Module area: 1600 cm^2
- 4.64 kg of Si

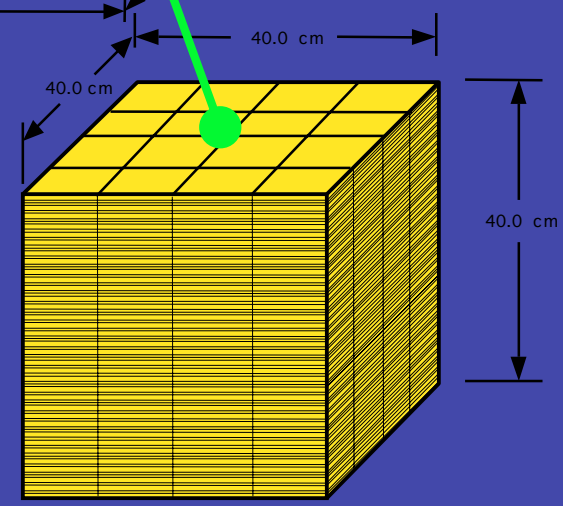

Silicon Converter/Tracker